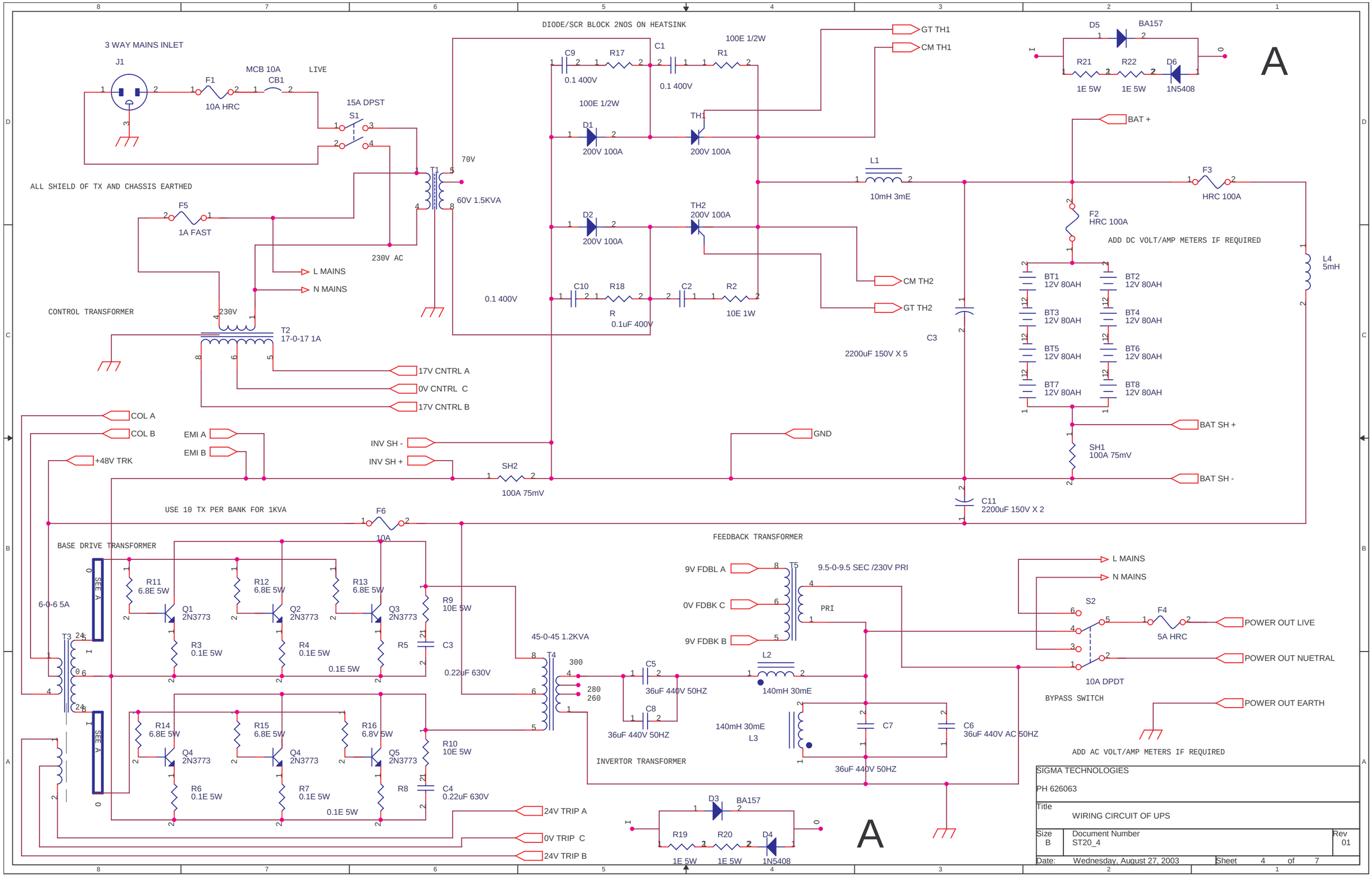

SIGMA TECHNOLOGIES	
PH 626063	
Title	WIRING CIRCUIT OF UPS
Size B	Document Number ST20_4 — Rev 01
Date: Wednesday, August 27, 2003	Sheet 4 of 7