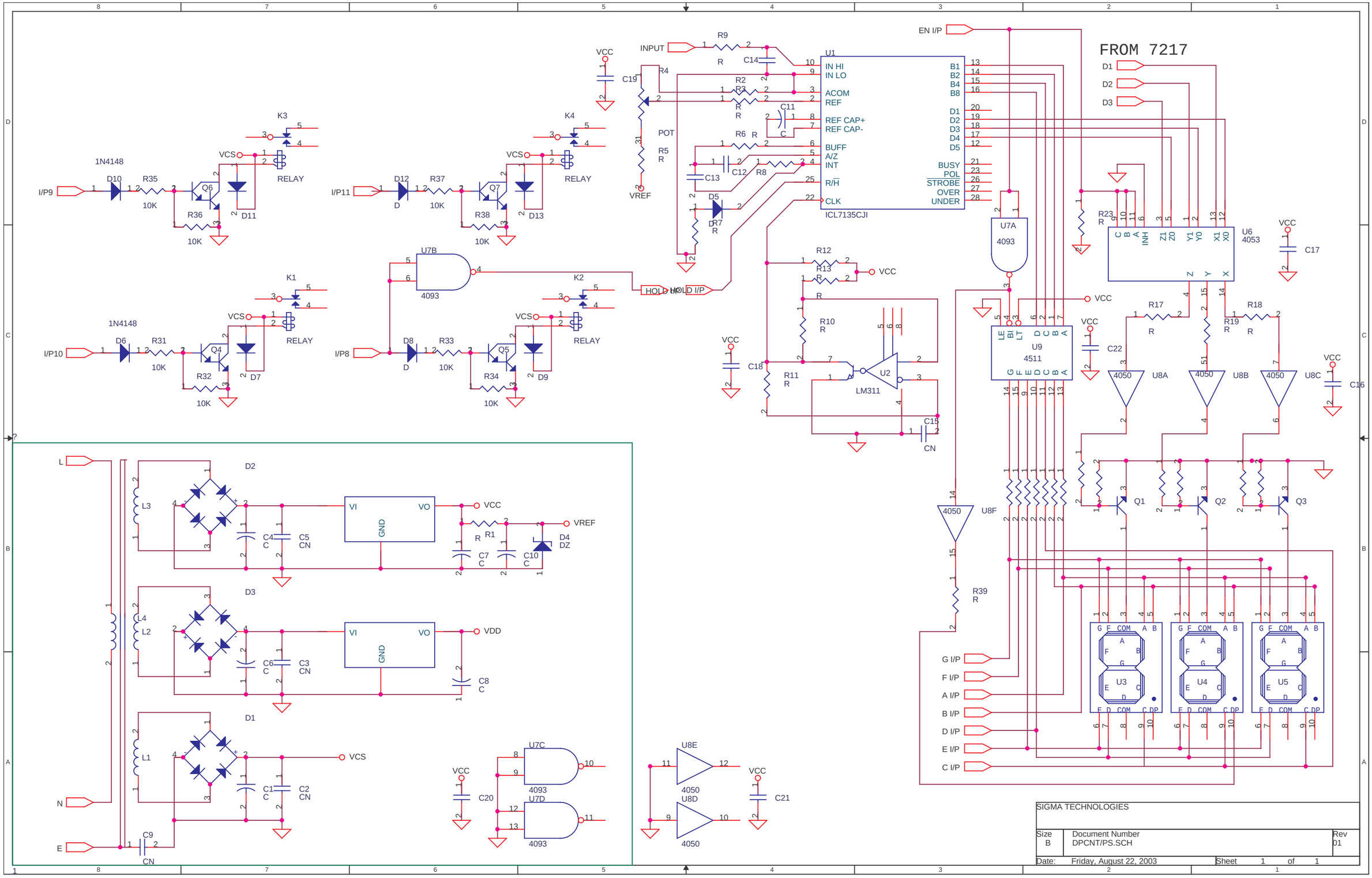

SIGMA TECHNOLOGIES

Size	Document Number	Rev
B	DPCNT/PS.SCH	01

Date: Friday, August 22, 2003 Sheet 1 of 1