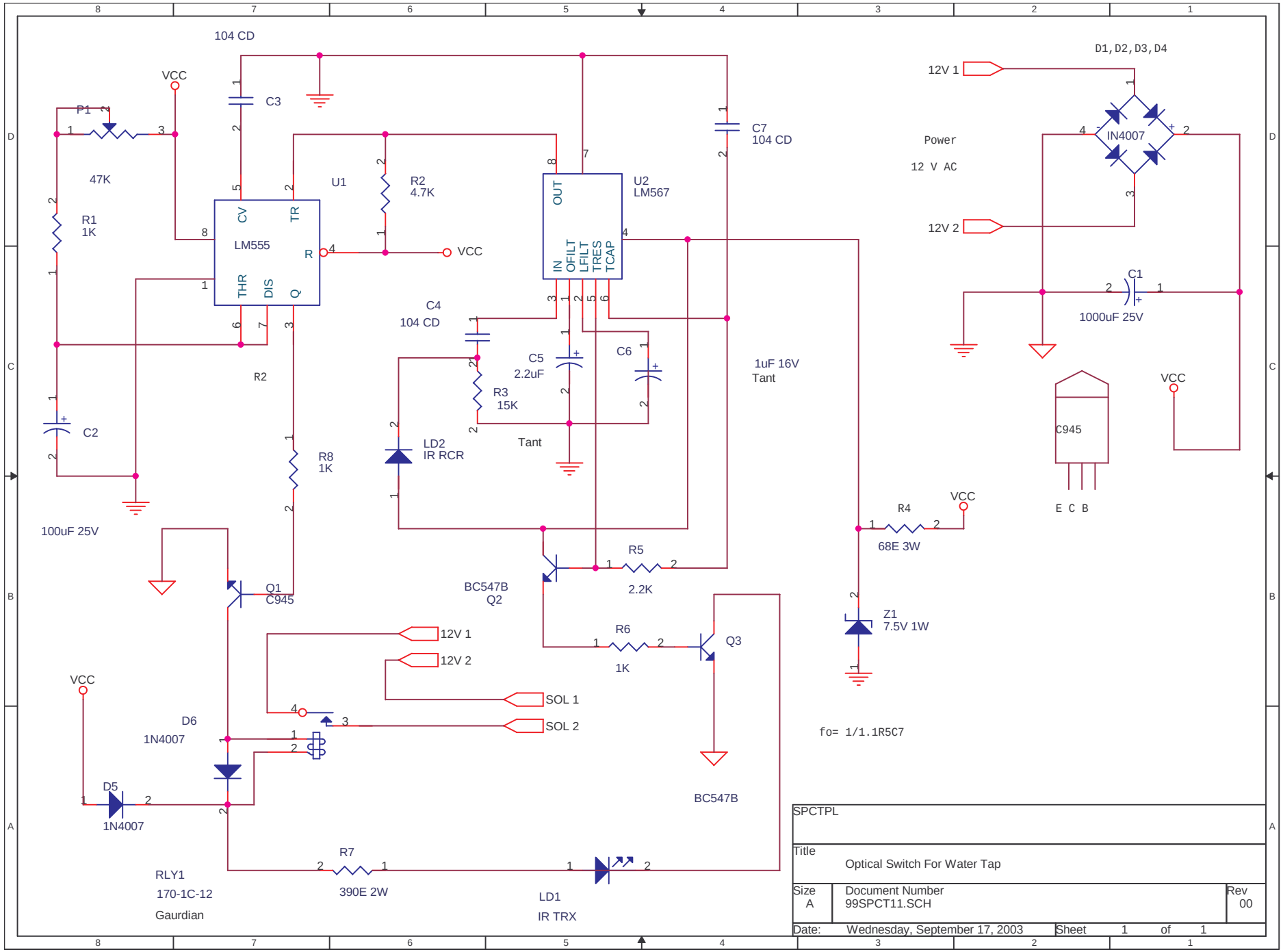

SPCTPL		
Title	Optical Switch For Water Tap	
Size A	Document Number 99SPCT11.SCH	Rev 00
Date: Wednesday, September 17, 2003	Sheet 1 of 1	