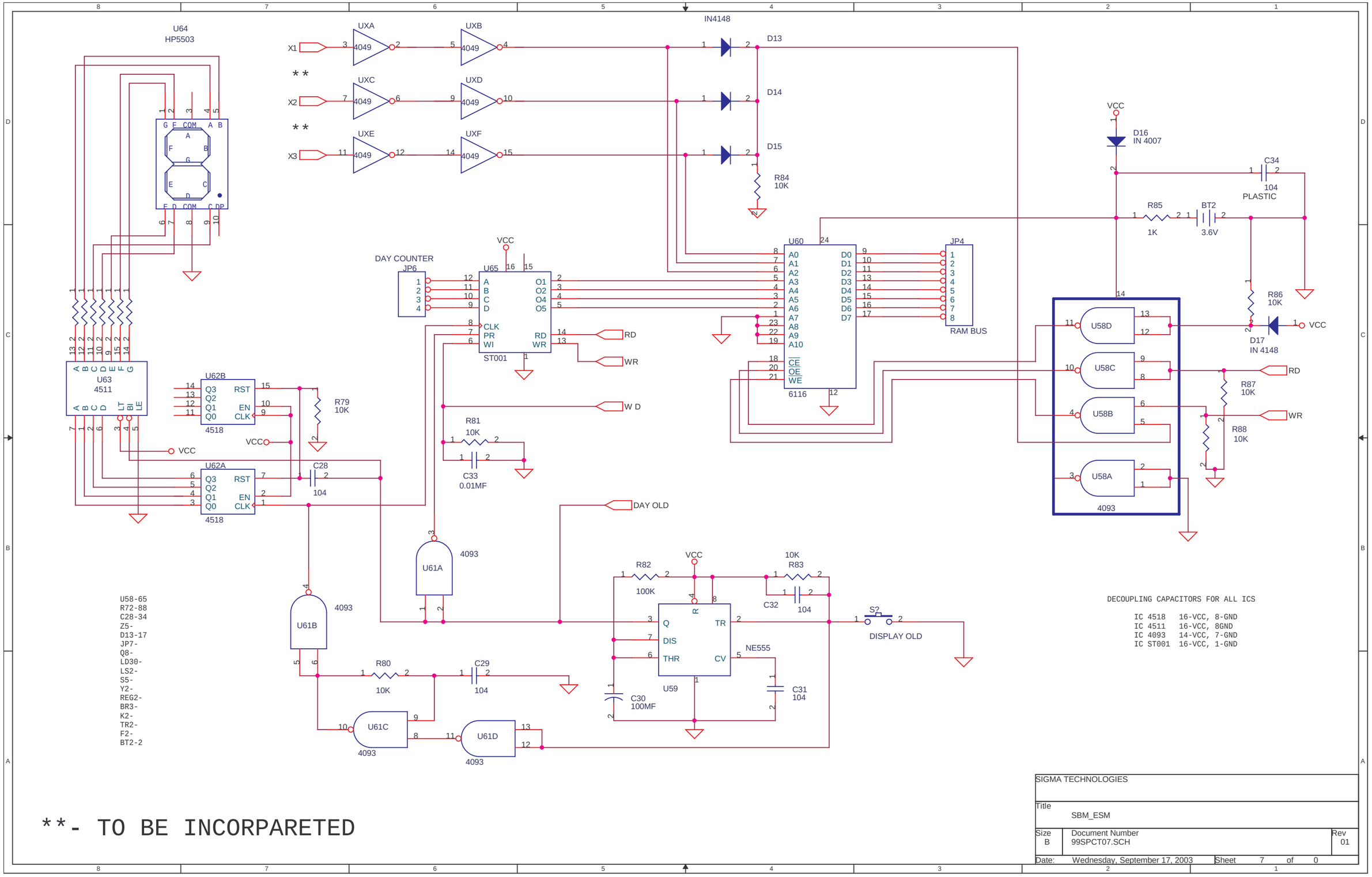
U64
HP5503
G F COM A B
F B
G
E C
D
F D COM C DP
U63
4511
A B C D E F G
A B C D LT BI LE
VCC
U62B
Q3 Q2 Q1 Q0
RST EN CLK
4518
R79
10K
U62A
C28
104
X1
X2
X3
UXA
UXB
UXC
UXD
UXE
UXF
4049
IN4148
D13
D14
D15
R84
10K
DAY COUNTER
JP6
U65
A B C D
O1 O2 O4 O5
CLK PR WI
RD WR
ST001
RD
WR
W D
R81
10K
C33
0.01MF
DAY OLD
U61A
4093
U61B
U61C
U61D
R80
10K
C29
104
U60
A0 A1 A2 A3 A4 A5 A6 A7 A8 A9 A10
D0 D1 D2 D3 D4 D5 D6 D7
CE OE WE
6116
JP4
RAM BUS
VCC
D16
IN 4007
C34
104
PLASTIC
R85
1K
BT2
3.6V
R86
10K
D17
IN 4148
U58D
U58C
U58B
U58A
4093
R87
10K
R88
10K
R82
100K
R83
10K
C32
104
NE555
U59
C30
100MF
C31
104
S2
DISPLAY OLD
U58-65
R72-88
C28-34
Z5-
D13-17
JP7-
Q8-
LD30-
LS2-
S5-
Y2-
REG2-
BR3-
K2-
TR2-
F2-
BT2-2
DECOUPLING CAPACITORS FOR ALL ICS
IC 4518 16-VCC, 8-GND
IC 4511 16-VCC, 8GND
IC 4093 14-VCC, 7-GND
IC ST001 16-VCC, 1-GND
**- TO BE INCORPARETED
SIGMA TECHNOLOGIES
Title
SBM_ESM
Size
B
Document Number
99SPCT07.SCH
Rev
01
Date: Wednesday, September 17, 2003
Sheet 7 of 0