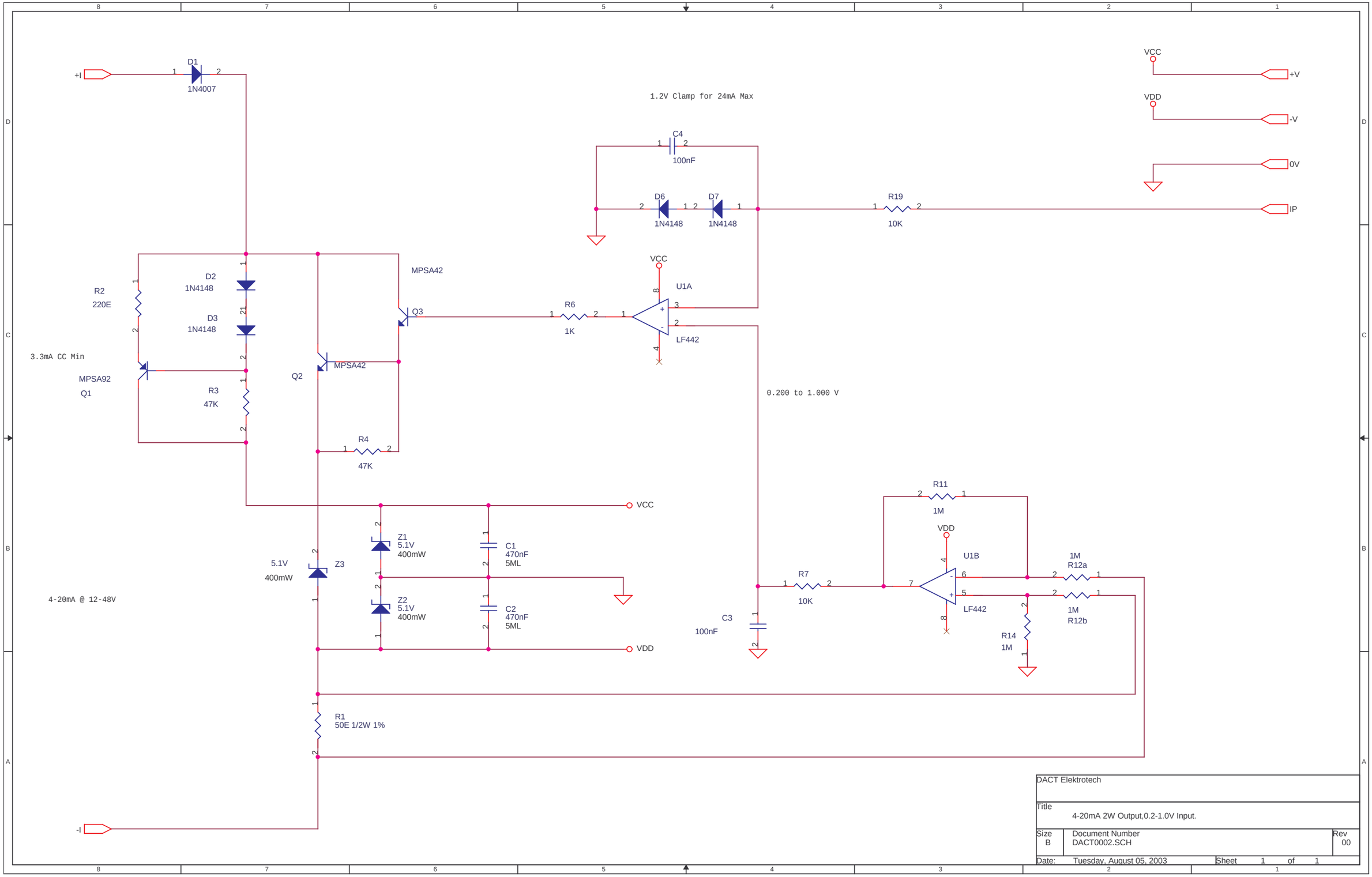

DACT Elektrotech		
Title: 4-20mA 2W Output,0.2-1.0V Input.		
Size: B	Document Number: DACT0002.SCH	Rev: 00
Date: Tuesday, August 05, 2003	Sheet 1 of 1	