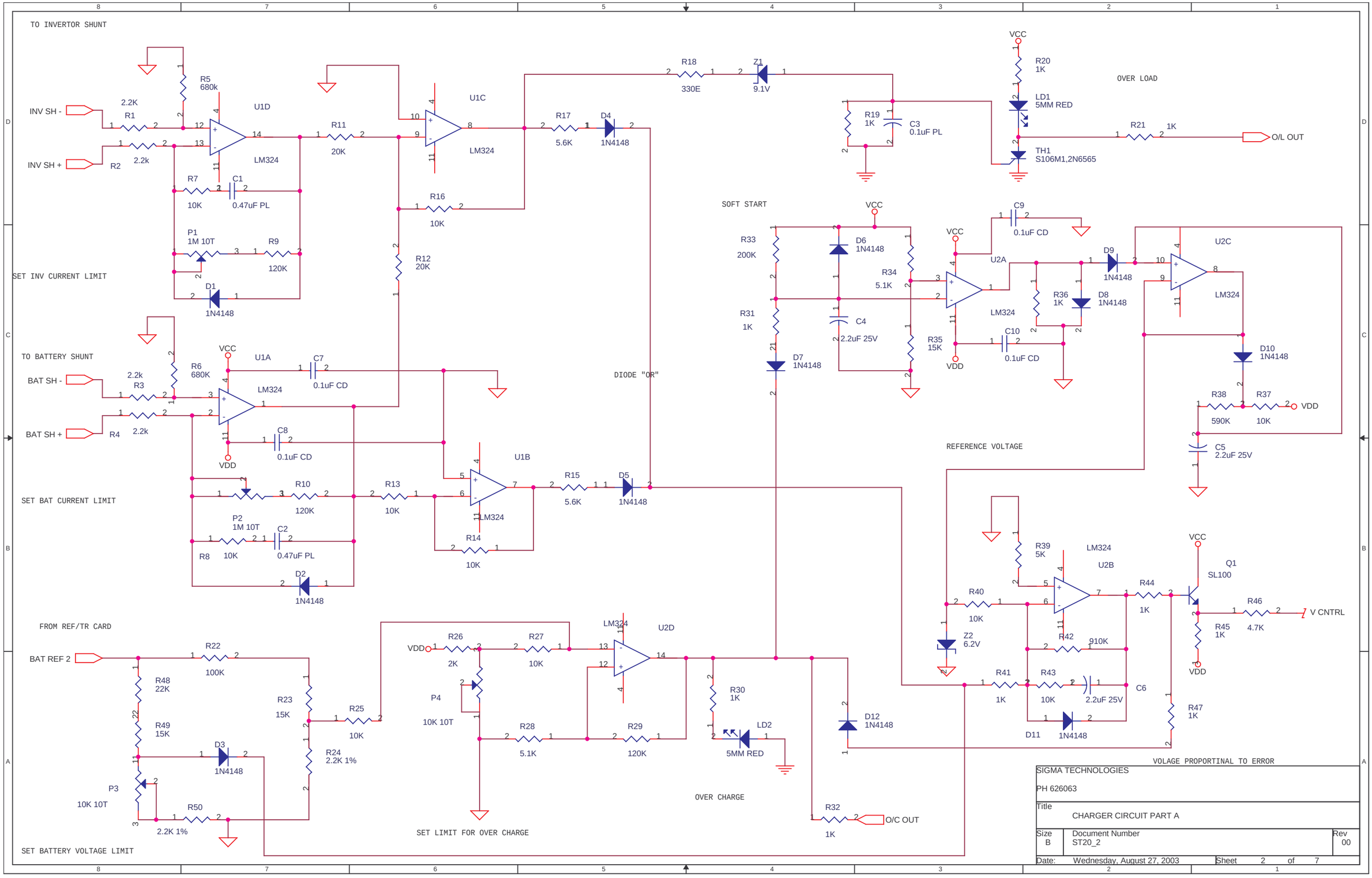

SIGMA TECHNOLOGIES		
PH 626063		
Title: CHARGER CIRCUIT PART A		
Size: B	Document Number: ST20_2	Rev: 00
Date: Wednesday, August 27, 2003	Sheet 2 of 7	