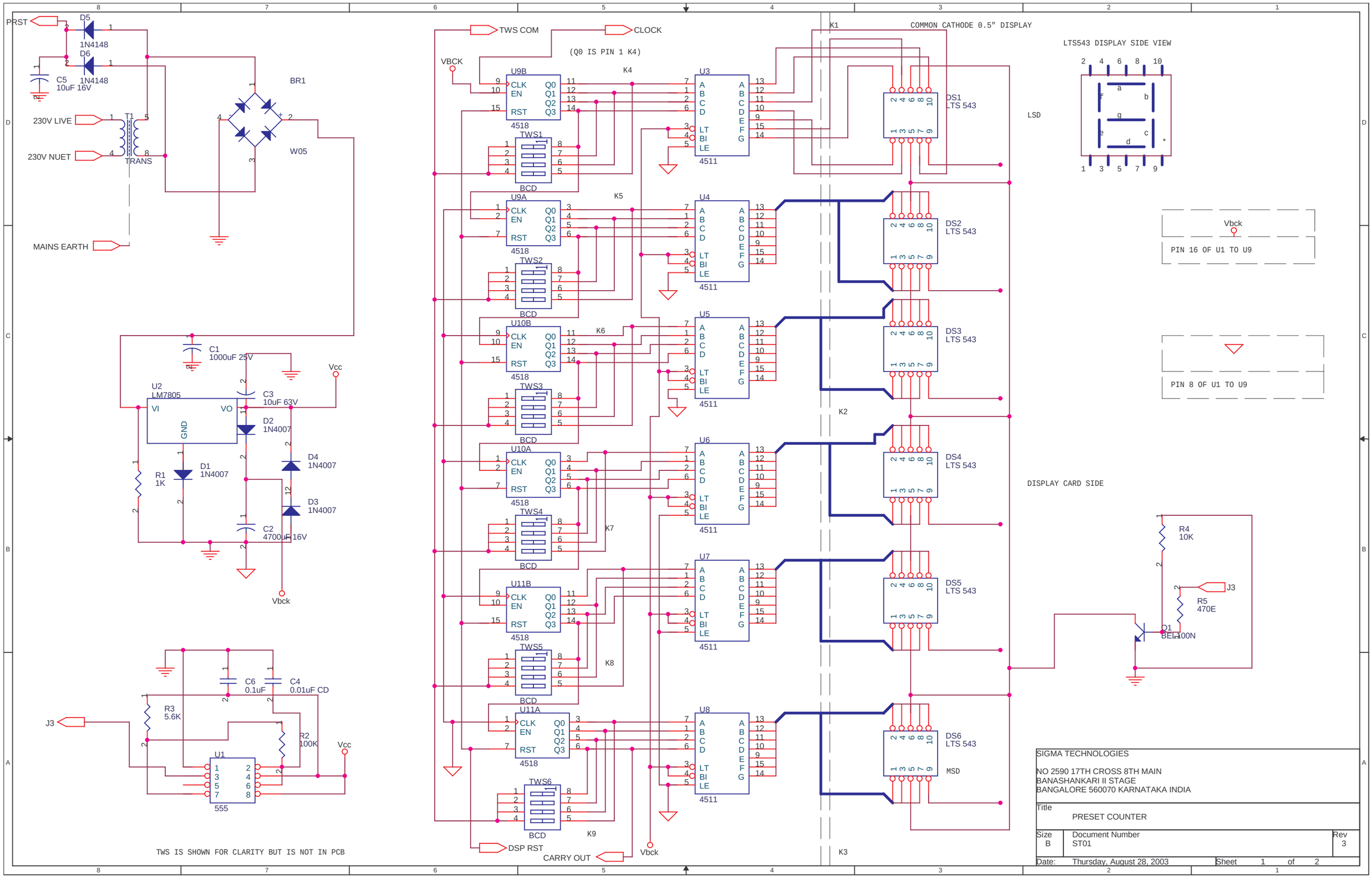

SIGMA TECHNOLOGIES

NO 2590 17TH CROSS 8TH MAIN
BANASHANKARI II STAGE
BANGALORE 560070 KARNATAKA INDIA

Title: PRESET COUNTER

Size	Document Number	Rev
B	ST01	3

Date: Thursday, August 28, 2003 Sheet 1 of 2