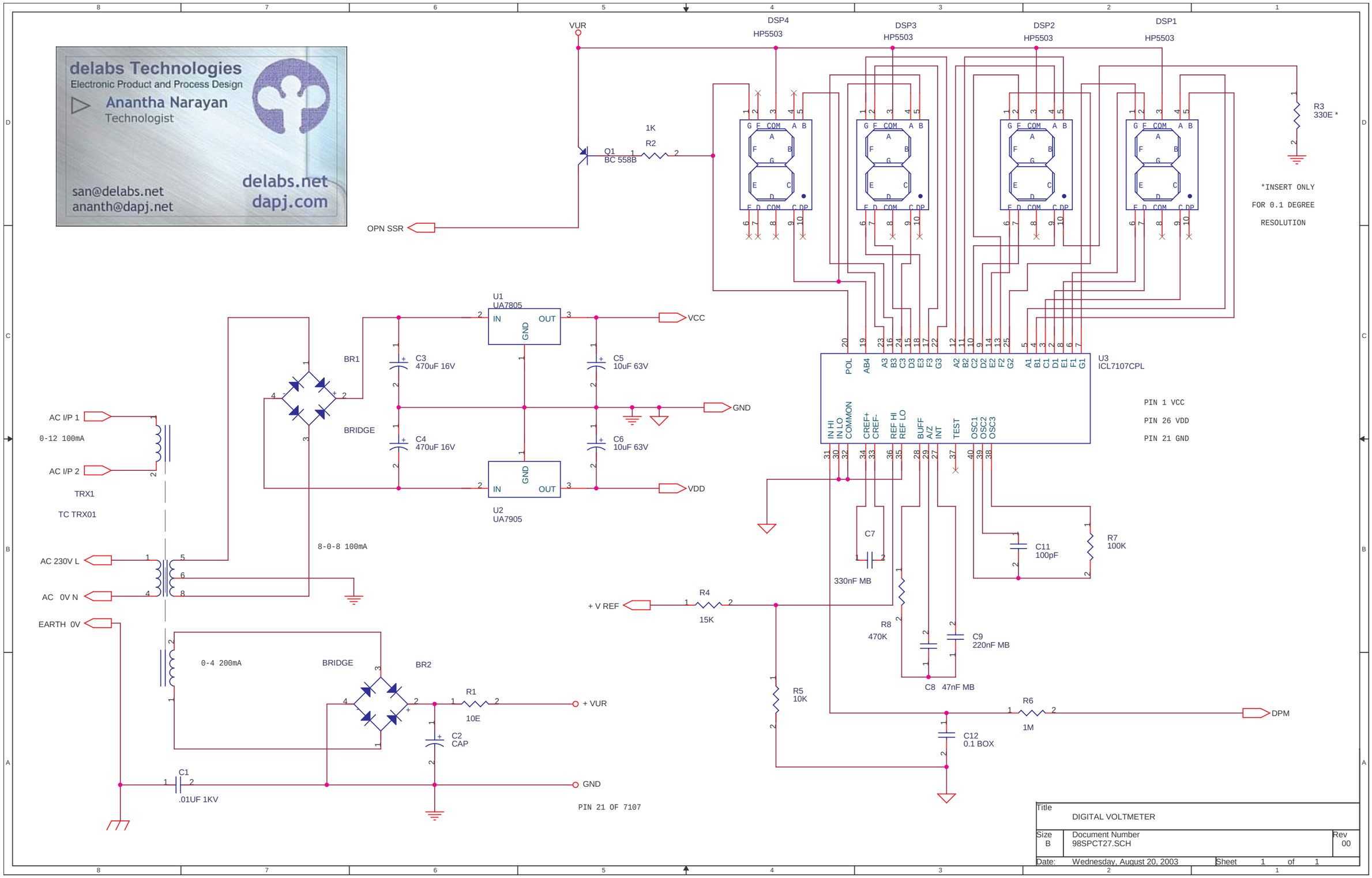
delabs Technologies
Electronic Product and Process Design
Anantha Narayan
Technologist
san@delabs.net
ananth@dapj.net
delabs.net
dapj.com
VUR
DSP4
HP5503
DSP3
HP5503
DSP2
HP5503
DSP1
HP5503
Q1
BC 558B
1K
R2
OPN SSR
R3
330E *
*INSERT ONLY
FOR 0.1 DEGREE
RESOLUTION
U1
UA7805
IN
OUT
GND
VCC
C3
470uF 16V
C5
10uF 63V
BR1
BRIDGE
GND
C4
470uF 16V
C6
10uF 63V
U2
UA7905
VDD
AC I/P 1
0-12 100mA
AC I/P 2
TRX1
TC TRX01
AC 230V L
AC 0V N
EARTH 0V
8-0-8 100mA
0-4 200mA
BRIDGE
BR2
R1
10E
+ VUR
C2
CAP
C1
.01UF 1KV
GND
PIN 21 OF 7107
U3
ICL7107CPL
POL
AB4
IN HI
IN LO
COMMON
CREF+
CREF-
REF HI
REF LO
BUFF
A/Z
INT
TEST
OSC1
OSC2
OSC3
PIN 1 VCC
PIN 26 VDD
PIN 21 GND
C7
330nF MB
C11
100pF
R7
100K
+ V REF
R4
15K
R8
470K
C9
220nF MB
C8 47nF MB
R5
10K
R6
1M
DPM
C12
0.1 BOX
Title
DIGITAL VOLTMETER
Size
B
Document Number
98SPCT27.SCH
Rev
00
Date:
Wednesday, August 20, 2003
Sheet 1 of 1